samet

- Opening Angle : 95˚
- Hinge Body : Steel
- Hinge Cup Steel : Zamac
- Crank Type : 0-9-18 mm
- Finish : Nickel
- Packaging : 250 Pieces

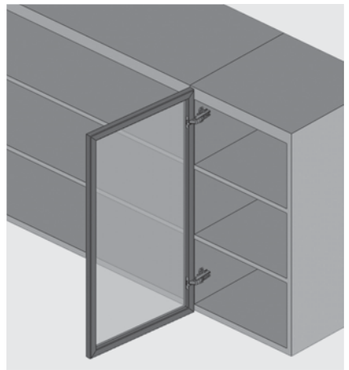

Cranking	0 mm
Aluminium Kutu Profil Star Hinge Code List	
DEFINITION	CODE
Aluminum Profile Star Hinge 0 mm	103111

Cranking	9 mm
Aluminium Kutu Profil Star Hinge Code List	
DEFINITION	CODE
Aluminum Profile Star Hinge 9 mm	103112

Cranking	18 mm
Aluminium Kutu Profil Star Hinge Code List	
DEFINITION	CODE
Aluminum Profile Star Hinge 18 mm	103113

Screw Options
Ø3,5x9 mm Countersunk Headed Screw

Page Directions	
Mounting Plates	page 170
Mechanisms	page 192
Distances	page 210
Decorative Covers	page 216
Decofix Closing Systems	page 220
Assembly	page 222
Dimension Charts and Symbols	page 224

Cranking **0 mm**

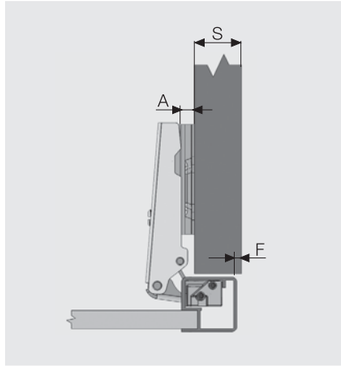

A= 23+F-S

Cranking **9 mm**

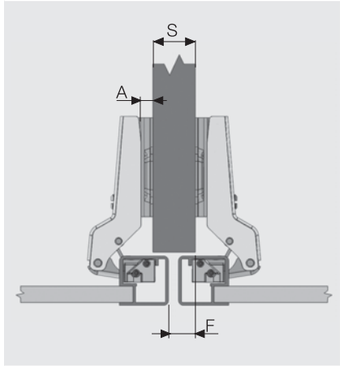

A= 14+F-S

Cranking **18 mm**

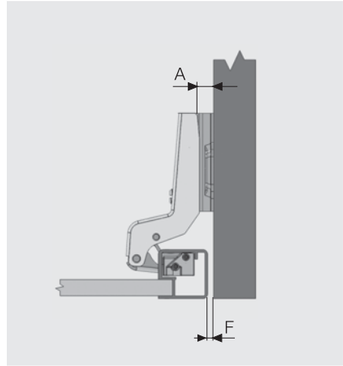

A= F+T

Calculation Table

Cranking		0 mm					
S	Wall Thickness	18			16		
A	Thickness of Distance	5	6	7	7	9	-
F	Minimum Gap	0	1	2	0	2	-

Cranking		9 mm					
S	Wall Thickness	18			16		
A	Thickness of Distance	6	7	-	7	9	-
F	Minimum Gap	-	10	11	-	9	11

Cranking		18 mm					
A	Thickness of Distance	6	7	-	-	-	-
F	Minimum Gap	-	1	2	-	-	-
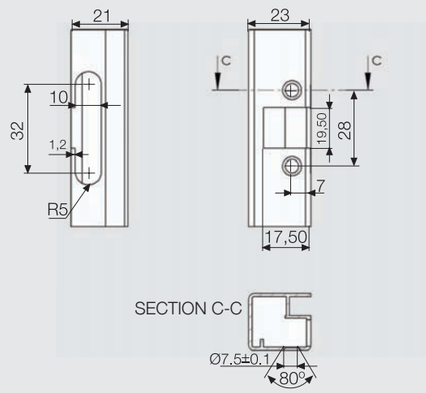
Hinge Cup Dimensions