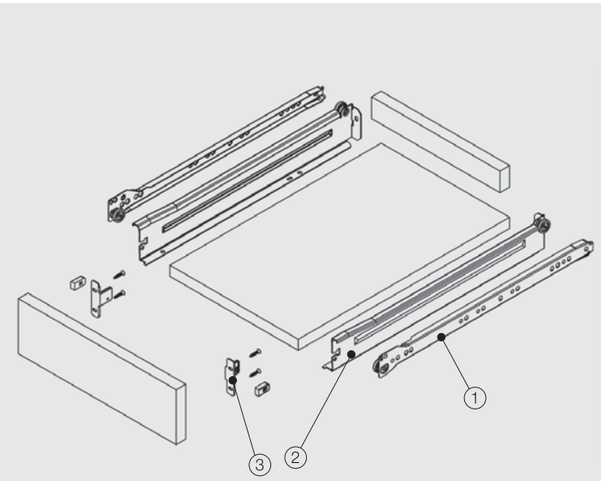

- Esthetic steel appearance
- Automatic closure system at a 70 mm opening length
- Drawer Length: 400/450/500/550 mm
- Finish: Electrostatic (White, Cream, Metallic and Gray)
- Silent running wheel system
- The improved stability guarantees a long product durability
- Dynamic load capacity: 25 Kg
- Safety system to avoid derailing
- Vertical and horizontal adjustment opportunity

1-2 Drawer Set

NOMINAL SIZE	CODE	MODEL	COLOR	PACKAGING
400 mm	1121041	Without Claw	White	10 Set/Crt.
400 mm	1120041	With Claw	White	10 Set/Crt.
400 mm	1121042	Without Claw	Biege	10 Set/Crt.
400 mm	1120042	With Claw	Biege	10 Set/Crt.
400 mm	1121043	Without Claw	M. Gray	10 Set/Crt.
400 mm	1120043	With Claw	M.Gray	10 Set/Crt.
450 mm	1121051	Without Claw	White	10 Set/Crt.
450 mm	1120051	With Claw	White	10 Set/Crt.
450 mm	1121052	Without Claw	Biege	10 Set/Crt.
450 mm	1120052	With Claw	Biege	10 Set/Crt.
450 mm	1121053	Without Claw	M. Gray	10 Set/Crt.
450 mm	1120053	With Claw	M. Gray	10 Set/Crt.
500 mm	1121061	Without Claw	White	10 Set/Crt.
500 mm	1120061	With Claw	White	10 Set/Crt.
500 mm	1121062	Without Claw	Biege	10 Set/Crt.
500 mm	1120062	With Claw	Biege	10 Set/Crt.
500 mm	1121063	Without Claw	M. Gray	10 Set/Crt.
500 mm	1120063	With Claw	M. Gray	10 Set/Crt.
550 mm	1121071	Without Claw	White	10 Set/Crt.
550 mm	1120071	With Claw	White	10 Set/Crt.
550 mm	1121072	Without Claw	Biege	10 Set/Crt.
550 mm	1120072	With Claw	Biege	10 Set/Crt.
550 mm	1121073	Without Claw	M. Gray	10 Set/Crt.
550 mm	1120073	With Claw	M. Gray	10 Set/Crt.

3 Connection Fitting

MATERIAL	CODE	MODEL	COLOR	PACKAGING
Zinc	1121801	Countersunk	Nickel	50 Set/Box
Zinc	1121802	Ø8 mm	Nickel	50 Set/Box
Zinc	1121803	Ø10 mm	Nickel	50 Set/Box

Slide Mounting Dimensions

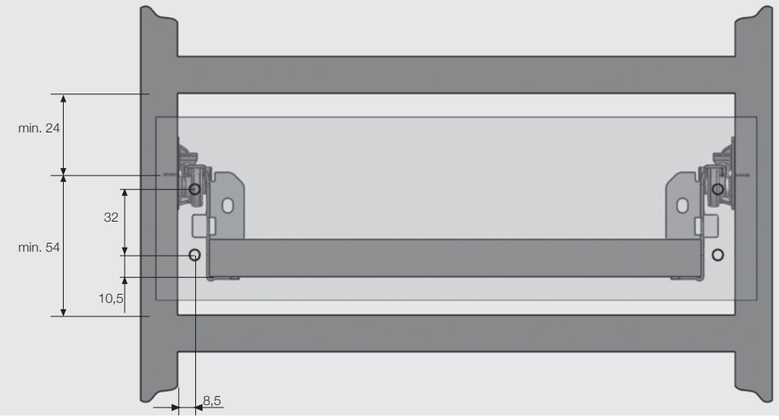

Formulas to Compute Dimensions

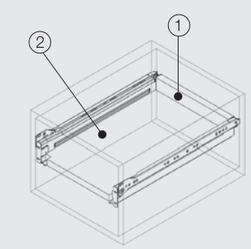

1
Drawer Back Panel Width=Internal Cabinet Width - 31mm
Drawer Back Panel Height=Minimum 39 mm
(For 16 mm wooden bottom panel.)

2
Drawer Wooden Floor Width= Internal Cabinet Width - 31 mm
Drawer Wooden Floor Length=Side Length - 1 mm

Slide Screw Location

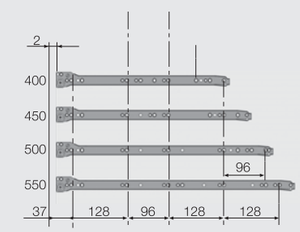

Wooden Backboard Application

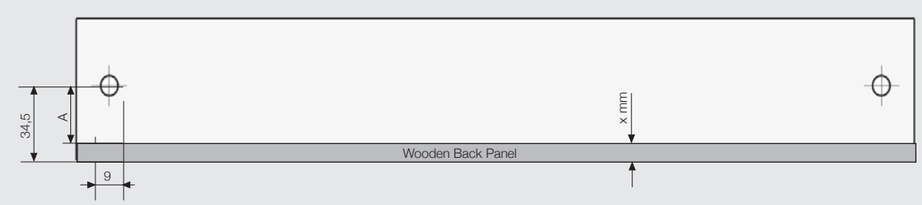

* A= 34,5 - x mm

*All dimensions in the graphs above are measured in mm.

Recommended Screws

Ø3,5x16 mm Chipboard Screw

Ø6,1x11,5 mm Euro Screw