- Material : Plastic
- Appearance : Gray
- Packaging : 250 Pieces
- These distances could be used only with mounting plates at L=37 mm .

(+5°) Star Track and Star Hinge Distance

Code List

DEFINITION	CODE
(+5°) Star Track and Star Hinge Distance	102112

(-5°) Star Track and Star Hinge Distance

Code List

DEFINITION	CODE
(-5°) Star Track and Star Hinge Distance	102113
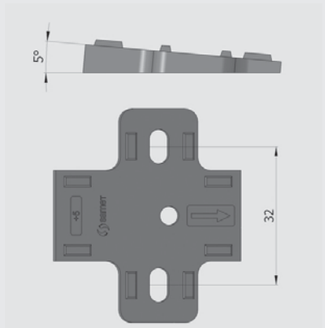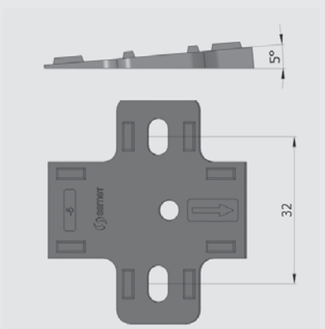
Dimensions